LAVORWASH SERVICE

Parts

CODE	**8.401.0028**
DESCRIPTION	**LAVASUPERFICI A VAPORE DUO STEAM C/FERRO P.S/ACC. (SKM-BR)**
REVISION	**9/9/2002**
VALIDITÀ	**WEEK 27 2014**

Copyright Lavorwash

Pos.	Code	Price	Q.ty per	Qty.	Description	Alternative	Price	Q.ty per	Description
001	5.409.0008	22.92	1	1	COMPLETE CAP		0	0	
002	4.415.0005	12	2	1	4 LIGHTS BOARD	4.415.0007	5.38	4	4-WAYS CARD, 230V HP SERIE INSULATED
003	3.412.0003	11.25	2	1	ELECTROVALVE HP REG.V230 FLANGE/RUBBER		0	0	
004	3.002.0111	1.12	18	3	SCREW TC-TORX M4X10 ZNT		0	0	
005	3.099.0116	1.12	18	1	BAND 10091		0	0	
007	4.408.0010	3.33	7	1	INSULATED COVER FOR BOILER		0	0	
008	3.200.0068	1.12	18	1	OR GASKET 8.74X1.78		0	0	
009	4.408.0008	1	25	3	SUPPORT PAD	6.005.0165	11.25	2	STEAM STOPPER KIT
010	3.401.0055	5	4	2	SWITCH BIP PUSH L5 16A		0	0	
011	3.403.0023	15.7	2	1	AIR PRESSURE SWITCH 3.7 BAR		0	0	
012	4.408.0012	2.5	8	1	COLLAR DIAM.24		0	0	
013	4.406.0001	3.1	7	1	BOILER NECK		0	0	
014	3.002.0015	1.46	14	10	AUTOTAPPING SCREW TCEI M6X25 ZNT		0	0	
015	3.004.0003	1.12	18	2	WASHER D.4X8 DIN6798 ZNT		0	0	
016	4.405.0001	22.49	1	1	UPPER BOILER		0	0	
017	4.408.0009	5.71	4	1	OR GASKET 124X188		0	0	
018	4.405.0002	19.79	2	1	LOWER BOILER HP V230W1500	5.409.0028	46.49	1	BOILER ASSY HP 230V
019	3.403.0015	7.47	4	1	THERMOSTAT 150'C	3.403.0052	3.6	6	AUTOMATIC THERMOSTAT 150 C
020	3.403.0016	3.9	6	1	THERMOSTAT 187'C		0	0	
021	4.407.0001	1.14	18	1	THERMOSTAT FIXING CLAMP		0	0	
022	3.002.0132	1.12	18	1	SELF-TAPPING SCREW TC-TC 3,5X9,5 UNI6954 ZNT		0	0	
023	4.412.0008	22.49	1	1	CABLES		0	0	

8.401.0028	**R54090002-2**	**GRUPPO CALDAIA DUO-STEAM SENZATRASF.BASSA TENSIONE**

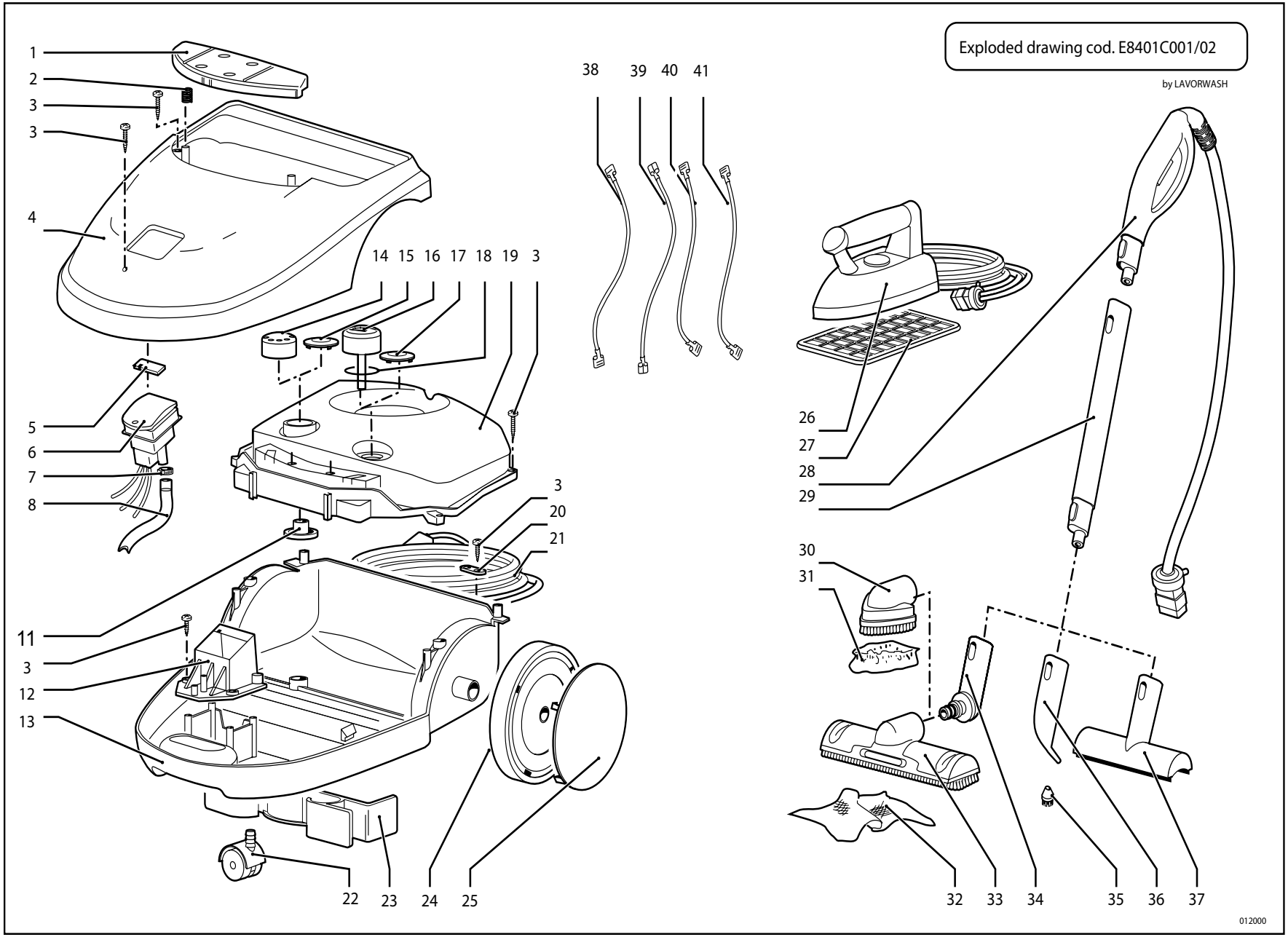
Exploded drawing cod. E8401C001/02
by LAVORWASH
1
2
3
3
4
14 15 16 17 18 19 3
38 39 40 41
5
6
7
8
3
20
21
11
3
12
13
22 23 24 25
26
27
28
29
30
31
32 33 34 35 36 37
012000

Pos.	Code	Price	Q.ty per	Qty.	Description	Alternative	Price	Q.ty per	Description
001	4.408.0003	8.07	3	1	CONTROL BOTTON DEVICE		0	0	
002	4.407.0002	1.14	18	2	SPRING FOR SWITCHES BOTTON		0	0	
003	3.002.0106	1.12	18	11	SCREW TC-TC 3.9X16 UNI 6954ZNT		0	0	
004	4.413.0003	22.92	1	1	YELLOW COVER RAL 1021		0	0	
005	4.408.0013	1.12	18	1	GASKET FOR QUICK CONNECTION SOCKET		0	0	
006	5.409.0001	31.73	1	1	KIT SOCKET FOR QUICK CONNECTION		0	0	
007	3.099.0137	1.12	18	1	IRON CLAMP D.8-10mm		0	0	
008	4.418.0001	4	6	1	LINED HOSE EPDM L400MM	53.7047000	4.74	5	TUBO DIAM. 4X8 CALZATO
011	4.408.0005	0.51	40	1	REGULATOR FIXING KNOB		0	0	
012	4.408.0001	2.48	9	1	FIXING SUPPORT		0	0	
013	4.413.0001	30.12	1	1	LOWER HOUSING - GREY	4.413.0039	22.92	1	BLACK LOW COVER HP
014	4.408.0004	0.61	40	1	BLACK REGULATOR KNOB		0	0	
016	3.403.0017	65	1	1	THERMOSTAT D.40	3.403.0139	10.1	2	THERMOMETER D.40 HP BLACK (GLASS BODY PC)
018	3.200.0065	1.12	18	1	OR 33.05X1.78 GASKET		0	0	
019	4.413.0002	19.47	2	1	COVER FOR BOILER	6.005.0141	24.34	1	KIT 129 COPERCHIO HP E MANOPOLA REG.
020	4.008.0277	1.14	18	1	FIX PAD CABLE HOLDER		0	0	
021	4.412.0021	12.41	2	1	CABLE H05-VVF 3X1 MT4 SCHUKO		0	0	
022	3.754.0006	4	5	1	D.39 PIVOTTING TWINNING WHEELS		0	0	
023	4.408.0002	1.89	11	1	CABLE REEL		0	0	
024	4.408.0007	2.66	8	2	BLACK WHEEL DIAM. 170		0	0	
025	3.099.0115	11.25	2	2	WHEEL COVER		0	0	
026	6.402.0010	112.96	1	1	PROFESSIONAL IRON WITH PLUG 230/240		0	0	
027	4.408.0018	6.06	4	1	IRON CARPET	4.408.0083	4.2	5	IRON RUBBER MAT RB 2000
028	6.402.0015	99.59	1	1	FLEXIBLE HOSE FOR STEAM CLEANER		0	0	
030	6.402.0005	9.3	3	1	BLACK TRIANGULAR BRUSH		0	0	
031	3.099.0126	11.25	2	1	TOWEL WIPE FOR INDUSTRIAL USE(22x22cm.with		0	0	
034	6.402.0003	4	5	1	BLACK BRUSH COUPLING		0	0	
035	6.402.0009	3.94	6	1	SMALL ROUND BRUSH - BLACK D.27		0	0	
036	6.402.0007	4	5	1	INCLINED SPRAY GUN		0	0	
037	6.402.0006	22.49	1	1	BLACK GLASS TOOL		0	0	

8.401.0028	**R84010028-1**	**LAVASUPERFICI A VAPORE DUO STEAM C/FERRO P.S/ACC. (SKM-BR)**

ALPHANUMERICAL INDEX OF CATALOG TABLES COMPONENTS

Code	Exploded View	Pos.	Qty
3.002.0015	R54090002-2	014	10
3.002.0106	R84010028-1	003	11
3.002.0111	R54090002-2	004	3
3.002.0132	R54090002-2	022	1
3.004.0003	R54090002-2	015	2
3.099.0115	R84010028-1	025	2
3.099.0116	R54090002-2	005	1
3.099.0126	R84010028-1	031	1
3.099.0137	R84010028-1	007	1
3.200.0065	R84010028-1	018	1
3.200.0068	R54090002-2	008	1
3.401.0055	R54090002-2	010	2
3.403.0015	R54090002-2	019	1
3.403.0016	R54090002-2	020	1
3.403.0017	R84010028-1	016	1
3.403.0023	R54090002-2	011	1
3.412.0003	R54090002-2	003	1
3.754.0006	R84010028-1	022	1
4.008.0277	R84010028-1	020	1
4.405.0001	R54090002-2	016	1
4.405.0002	R54090002-2	018	1
4.406.0001	R54090002-2	013	1
4.407.0001	R54090002-2	021	1
4.407.0002	R84010028-1	002	2
4.408.0001	R84010028-1	012	1
4.408.0002	R84010028-1	023	1
4.408.0003	R84010028-1	001	1
4.408.0004	R84010028-1	014	1
4.408.0005	R84010028-1	011	1
4.408.0007	R84010028-1	024	2
4.408.0008	R54090002-2	009	3
4.408.0009	R54090002-2	017	1
4.408.0010	R54090002-2	007	1
4.408.0012	R54090002-2	012	1

Code	Exploded View	Pos.	Qty
4.408.0013	R84010028-1	005	1
4.408.0018	R84010028-1	027	1
4.412.0008	R54090002-2	023	1
4.412.0021	R84010028-1	021	1
4.413.0001	R84010028-1	013	1
4.413.0002	R84010028-1	019	1
4.413.0003	R84010028-1	004	1
4.415.0005	R54090002-2	002	1
4.418.0001	R84010028-1	008	1
5.409.0001	R84010028-1	006	1
5.409.0008	R54090002-2	001	1
6.402.0003	R84010028-1	034	1
6.402.0005	R84010028-1	030	1
6.402.0006	R84010028-1	037	1
6.402.0007	R84010028-1	036	1
6.402.0009	R84010028-1	035	1
6.402.0010	R84010028-1	026	1
6.402.0015	R84010028-1	028	1

Code	Exploded View	Pos.	Qty